TYPE VH210

ELECTRONIC ACTUATOR PILOT

Inlet Pressures to 250 PSIG

- **Modulate Process Variable in Relation to a Proportional Control Input Signal**
- **Spring Return Fail Closed** — Returns actuator to a closed position on power loss in 3 seconds or less.
- **Manual Override** — Allows simple field adjustment on signal or power loss.
- **NEMA 1 Enclosure** — Protects electronic components from industrial environments.
- **High Thrust Motor** — Allows Class IV shutoff.
- **Rapid Response** — Reacts to direct changes in 0-10 VDC or 4-20 mA signals from process controllers.
- **Cast Aluminum Yoke and Housing** — Provides years of trouble free actuator operation.
- **Standard Pilot Lower Body** — Uses proven design for dependability and compatibility with existing Spence Pilot installations.
- **Seemless Integration** — Balanced Main valve construction not required.
- **Multi Variable Control** — Pressure and Temperature control when integrated with additional Spence pilot.

APPLICATIONS

- E-Main Valve Pilot (Pressure / Temperature)
- Building Control Systems
- SCADA
- PLC
- Upgrading E Main Installations for Automated Control

ELECTRONIC DATA

- 4-20 mA or 0-10 VDC Input Signals
- 24 VAC 50-60 Hz Power Supply
- 17VA/12W Power Consumption
- UL Listed (UL873)

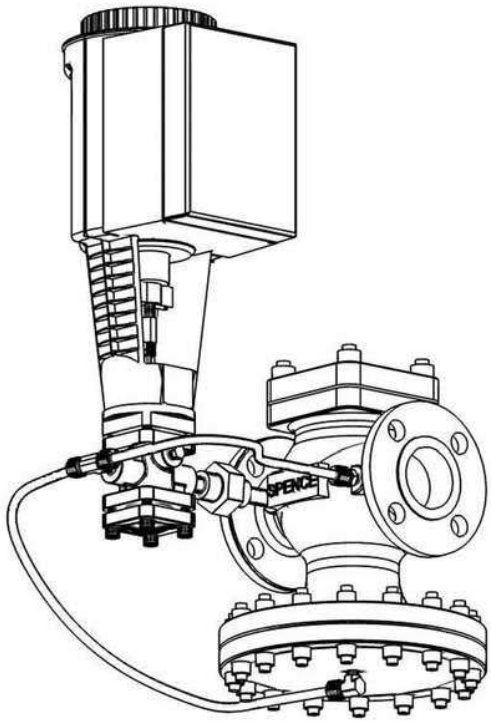

TYPE VH210

ELECTRONIC ACTUATOR PILOT

SPECIFICATION

The electronic actuator pilot shall maintain a system variable and modulate the valve travel in response to that system variable as requirements dictate. A continuous signal (4-20mA, 0-10 VDC) is transmitted by the system controller to the actuator which positions the valve stem. In the event of power loss, the electronic actuator pilot shall return to a closed position.

MATERIALS OF CONSTRUCTION

Body, Cast Iron.....ASTM 126 CI B
Body, Cast Steel .....ASTM A216 GR. WCB
Stem.....303 SS ASTM 582 Cond. A
Disc.....440 SS ASTM 276-75 Cond. A
Seat.....304 SS ASTM 276 Cond. A
Gasket.....Non-Asbestos

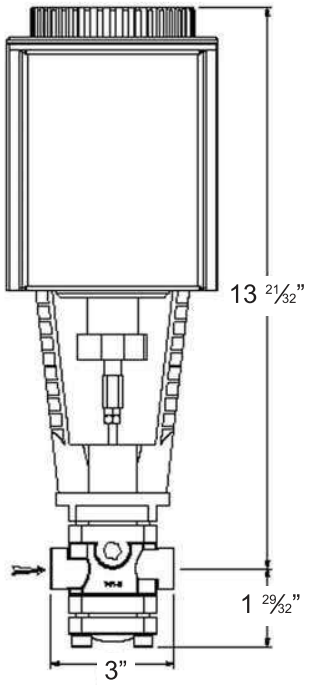

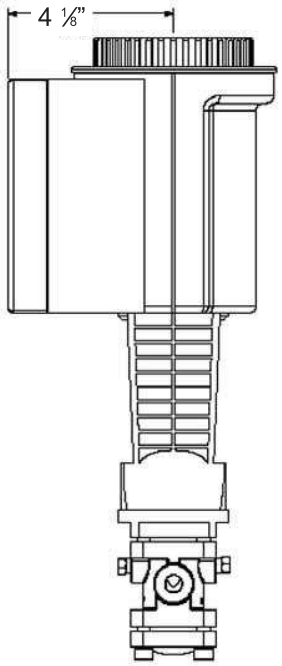

TYPE VH210 ELECTRONIC PILOT
12.5 LBS (5.7 KG)